SPEC SHEET

KoolMore 22 in. Countertop Bakery Display Case with Front Curved Glass and Rear Door, 0.9 cu. ft.

Model: DC-1C

FEATURES

- All glass-sided for maximum visibility
- Countertop design
- Rear door for easy load
- Stainless steel body
- Four-sided double tempered glass for durability and insulation

CLOSE UP IMAGES

TECHNICAL SPECS

Dimensions

Length	21.8
Width	14.2
Height	12
Interior Depth	21.42
Interior Width	14.21
Interior Height	9.4
Weightlbs	34

Capacity

Gross Cubic Feet	1.37
Net Cubic Feet	1.3
Individual Shelf Capacity	NA

Features & Materials

Door Style	Vertical Swing
Number Of Doors	1
Number Of Shelves	NA
Shelf Material Type	NA
Glass Type	Tempered
Exterior Material	Glass and Sheet Metal
Number Of Feet	4
Feet Material	Rubber
Legs Adjustable	No
Color Finish	Transparent and Stainless-Steel

Certifications

Certifications	ETL Listed for Sanitation

Plan View

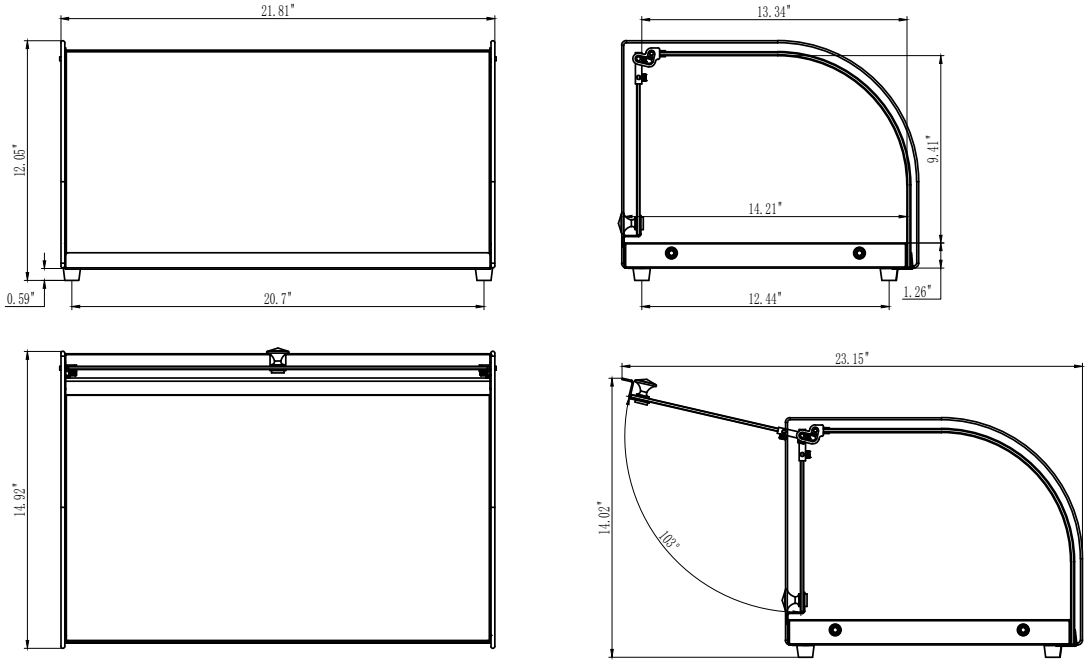

CERTIFICATIONS

Intertek

718-576-6342
info@koolmore.com