KOOLMORE
RESERVE

USER MANUAL

KOOLMORE RESERVE

Undercounter Built-In / Freestanding Dry Ager Refrigerator

Models: KM-DAR-34SS

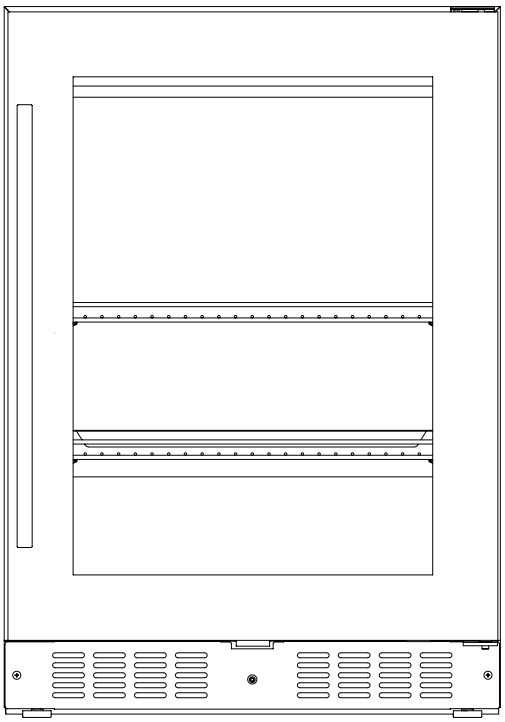

For any service related issues, please contact us:

718-576-6342

support@koolmore.com

Before using, please read the operating instructions carefully ensure proper application and achieve satisfactory results.

Stay informed with the latest information for your KoolMore Reserve Appliance.

Scan the QR code above to access the most recent user manual on our website, which is constantly being updated and improved.

SCAN FOR UPDATED MANUAL

If you need any assistance or have questions, our customer support team is here to help.
P- 718-576-6342 E- Support@koolmore.com

Please write down the model number and serial number below for future reference. Both numbers are located on the rating label on the back of your unit or inside of the unit and are needed to obtain warranty service. You may also want to staple your receipt to this manual as it is the proof of your purchase and may also be needed for service under warranty.

Model Number: _____
Serial Number: _____
Date of Purchase: _____

To better serve you, please do the following before contacting customer service:

If you received a damaged product, immediately contact the retailer or dealer that sold you the product.
Read and follow this instruction manual carefully to help you install, use, and maintain your unit.
Refer to the Troubleshooting section of this manual as it will help you diagnose and solve many common issues.

Contents

Safety 4
Product Features 8
Installation 10
Operation 16
Maintanence 24
Troubleshooting 27
Warranty 29

Safety

GENERAL SAFETY
To reduce the risk of fire, electrical shock or injury when using the appliance, follow basic precautions, including the following:

WARNING:
- If you receive a damaged product, immediately contact your dealer or builder. Do not install or use a damaged appliance.
- Do not install the appliance outdoors or in wet locations. This appliance is not designed for outdoor use or installation in a recreational vehicle, boat, or any other mobile application.
- Do not store or use gasoline or other flammable vapors and liquids in the vicinity of this or any other appliance.
- Keep packaging materials away from children. Packaging material can be dangerous for children.
- Connect this appliance to a 115 V, 15 A, 60 Hz, properly grounded circuit protected by a dedicated circuit breaker or time-delay fuse.
- Do not kink or pinch the power supply cord.
- Always grip the plug firmly and pull straight out from the outlet to avoid electrical shock. Do not unplug by pulling on the cord.
- To avoid electrical shock, do not use an extension cord or an adapter plug. Do not use the appliance if the power cord is damaged; it must be replaced by the manufacturer, its service agent or a similarly qualified person to avoid a hazard.

WARNING:
This appliance is not intended for use by persons (including children) with reduced physical, sensory or mental capabilities, or lack of experience and knowledge, unless they have been given supervision or instruction concerning use of the appliance by a person responsible for their safety. Children should be supervised to ensure that they do not play with the appliance.
Never allow anyone, including children, to sit, stand, climb on any part of the appliance. Doing so may cause damage, serious injury, or death.

Warning: Risk of Fire/ Flammable Material
This appliance uses R600a refrigerant which is environmentally friendly but flammable. Care must be taken during transportation and setting up of the appliance to ensure that the cooling unit is not damaged. Leaking coolant can ignite and may damage the eyes. In the event of any damage,
avoid open flames and anything which creates a spark.
Disconnect the power cord from the electrical outlet.
clear the room in which the appliance is located for several minutes and contact the Customer Service for advice.

WARNING!
- The room where the appliance is installed must be at least 35 Cubic Ft. per 8 grams of refrigerant. If the danger of combustible gases building up is present, additional ventilation must be provided.
- This appliance is heavy and care must be taken when handling, moving, or using it to avoid increasing the risk of a leak. Keep ventilation openings in the appliance enclosure or in the built-in

structure clear of obstruction.

- Do not use mechanical devices or other means to accelerate the defrosting process, other than those recommended by the manufacturer.
- Do not damage the refrigerant circuit. This appliance contains a small quantity of R600a refrigerant which is flammable.
- Do not use electrical appliances inside the food storage compartments of the appliance, unless they are of the type recommended by the manufacturer.
- Do not store explosive substances such as aerosol cans with a flammable propellant in this appliance.
- If the supply cord is damaged, it must be replaced by the manufacturer, its service agent or similarly qualified persons to avoid a hazard due to instability of the appliance.
- Danger of injury! LED lamp: If the cover is defective, do not look directly into the illumination with optical lenses from close proximity. The eyes can be injured.

WARNING

- Do not locate multiple portable socket-outlets or portable power supplies at the rear of the appliance. Danger of injury from broken glass! If installed at altitudes above 1500 meters, the glass shelves could break because of changes in air pressure. Shards of glass can cause severe injury. Do not use if parts are damaged. Replace only with parts that are recommended by the manufacturer.
- Opening the door for long periods can cause a significant increase of the temperature in the compartments of the appliance.
- Clean regularly surfaces that can come in contact with food.
- Clean water tanks if they have not been used for 48 hours; flush the water system if water has not been drawn for 5 days.
- Store raw meat and fish in suitable containers in the refrigerator, so that it is not in contact with or drip onto other food.
- Two-star frozen-food compartments are suitable for storing pre-frozen food, storing or making ice-cream, and making ice cubes.
- One-, two- and three-star compartments are not suitable for the freezing of fresh food.
- If the refrigerating appliance is left empty for long periods, switch off, defrost, clean, dry, and leave the door open to prevent mould developing within the appliance.

CAUTION

- Keep fingers out of the ‘pinch point’ areas. Clearances between the doors and between the doors and cabinet are necessarily small. Be careful closing doors when children are in the area.
- Do not cover shelves with aluminum foil or any other shelf material which may prevent air circulation.
- In the event of a power outage, minimize opening the door.
- Never clean appliance parts with flammable fluids. These fumes can create a fire hazard or explosion. And do not store or use gasoline or other flammable vapors and liquids in the vicinity of this or any other appliance. The fumes can create a fire hazard or explosion.
- Do not use solvent-based cleaning agents or abrasives on the interior. These cleaners may damage or discolor the interior.
- Please keep the products away from the fire or similar glowing substances before you dispose the appliance.
- Regarding the information pertaining to the use of the appliance, thanks to refer to the below

paragraph of the manual.
- Regarding the method for replacing illuminating lamps (if the lamps can be replaced by the user), thanks to refer to the below paragraph of the manual.
- This appliance is intended to be used in:
- household and similar applications such as staff kitchen areas in shops, offices and other working environments;
- farm houses and by clients in hotels, motels and other residential type environments;
- bed and breakfast type environments;
- catering and similar non-retail applications.
- If you have a lockable appliance, do not keep the key near the appliance or within reach of children.
- It is recommended that a separate circuit, serving only your appliance, be provided. Use receptacles that cannot be turned off by a switch or pull chain.

Disposal of your appliance packaging

Ensure that any plastic wrappings, bags etc. are disposed of safely and kept out of the reach of babies and young children.
Refrigeration equipment must be properly disposed of.

Please contact your local regulations and laws which govern the disposal of appliances in your area. This ensures that the refrigerant and the oil do not end up in the environment, thus protecting it. This appliance contains R600a refrigerant which is environmentally safe but flammable. Please ensure that old appliances are stored or kept safely before they are disposed of.

WARNING: Please ensure that old appliances with snap or latch doors are made safe by removing the door or destroying any snap fastenings or bolts. You will thus prevent children from locking themselves in the appliance and endangering their lives in any other way. DO NOT dispose of the appliance in landfill as the insulation in these appliances are flammable (R600a contained in them).

Disposal instructions

The appliance must not be disposed of in the household rubbish.
The coolant circuit, particularly the heat exchanger at the back/bottom of the unit must not be damaged.
The appliance is not to be handled as normal household waste but must be taken to a recycling collection point for electrical and electronic equipment.
By correctly disposing of this product you are contributing to the protection of the environment and preventing potential negative consequences for the environment and human health which could result from improper disposal. Further information about the recycling of the product may be obtained from your local authority or the store where you purchased the product.

IMPORTANT: Risk of child entrapment!

Before you throw away your old refrigerator or freezer:
1. Take off the doors.
2. Leave the shelves in place so that children may not easily climb inside.
3. Cut the prongs off the power plug and discard it separately from the old appliance.

WARNING
Do not store or use gasoline or other flammable vapors and liquids in the vicinity of this or any other appliance.

WARNING
IMPORTANT: This appliance is equipped with a protection against electrical shock.

1. This appliance must be plugged into a dedicated, grounded outlet. The electrical outlet must have only two prongs (no ground prong).
2. Do not cut or remove the third (grounding) prong from the power cord.
3. Do not use a power cord that is frayed or damaged.
4. Do not use extension cords.
5. Keep the power cord away from heated surfaces.

NOTE: *Use of an electrical outlet with a ground fault interrupter (GFI) is not recommended.*

State of California Proposition 65 Warnings:

WARNING: This product may contain one or more chemicals known to the State of California to cause cancer.

WARNING: This product may contain one or more chemicals known to the State of California to cause birth defects or other reproductive harm.

PRODUCT FEATURES

- Built-in or Free-standing installation dryer that can be used to produce the best taste meat at home.
- Control with digital display - Swiss timer touch input.
- Temperature range from 36°F to 54°F (2°C to 12°C), with relative humidity level setting from 50% to 90%.
- Dynamic compressor type cooling to ensure interior and humidity with even distribution of temperature control.
- Soft LED Interior Light with ON/OFF switch - Adjustable display brightness and interior lighting brightness.
- Automatic humidity, UVC disinfection, water shortage and open-door warning system.
- Automatic switch-off system to remain off during power outages or when the door is open.
- Temperature memory function - if power is lost, the unit will automatically go back to the set temperature when power is restored.
- Double safety glass door with child lock and UV protection.
- Reversible tempered double glazed smoked glass door creates an attractive display with minimal heat loss.
- Stainless steel interior with a robust and easy to clean design.
- Stainless steel exterior frame and stainless steel interior.
- Robust and durable design.
- 2 adjustable stainless steel shelves for flexibility.
- Environmental friendly refrigerant and foaming agent gas.
- Child safety lock system with keys.
- Energy efficient.

Please note: Specifications are subject to change without notice.

Dry Aging

Dry aging produces a very good meat quality by concentrating natural flavors and bringing out the best taste of the meat in the unit, you can produce the best tasting meat in the world at home.
The meat is literally a whole bouquet of aromas. The meat is characterized by a pleasant, firm texture and a more intense color.
When roasting or grilling the meat, the moisture-filled meat escapes and the tastefully spicy taste develops in the marbled meat.
The meat is perfectly tenderized with a rich, intense flavor.

Benefits

The best results in terms of taste are achieved when maturing on the bone and in large pieces.
Age and gender, as well as breed and husbandry conditions, influence the meat's quality. The meat of a young female cattle is considered the best for dry aging, as its meat becomes tender and flavorful with age.
Dry aging has been around for a long time. They have animals that have enough fat content to grow. For good dry aged meat, it's important to choose the right meat, because species-appropriate manner is the better choice because happy animals give better meat quality.

It is always recommended to let meat back, strands of meat hang for at least 21 days after slaughtering, under controlled conditions at a temperature of about 2°C (35.6°F), which is the maximum tenderness of the meat is reached. After the aging process, only the taste will develop further. Please note: A maturing period of 10 to 16 weeks is possible. Always ensure that the meat is handled hygienically during the aging process to avoid bacterial contamination. After the maturing process is complete, the dark red dry aging crust must be removed completely.

INSTALLATION

BEFORE USING YOUR APPLIANCE

- Remove all exterior and interior packing. Clean the interior surface with lukewarm water using a soft cloth. The unit may have residual odors at first, they will disappear as the unit cools.
- Before connecting the appliance to the power source, let it stand upright for at least 24 hours. This will reduce the possibility of a malfunction in the cooling system caused by handling during transportation to ensure that oil flows back into the compressor. During this time we recommend that you leave the door open to clear any residual odors.
- The door on this appliance can be opened from either the left or the right side. The unit is delivered with the door opening on the left side. Should you wish to open the door from the right, follow the instructions 'Reversing the door hinge'.
- Install the handle on the door if necessary.

INSTALLATION OF YOUR APPLIANCE

- The appliances are designed to be built-in or recessed or freestanding installation depending on your model. For the freestanding installation only models, it is not intended to be used as a built-in appliance.
- WARNING: Do not store or install the appliance outdoors. The unit is for indoor use only.
- WARNING: Do no install the appliance in the laundry. Avoid locating the unit in damp areas.
- Place your appliance on a floor/surface that is strong enough to support it when it is fully loaded. To level your unit, adjust the front leveling leg at the bottom of the unit.
- For freestanding installation, 100mm of space between the back and sides of the unit are suggested, which allows the proper air circulation to cool the compressor and condenser for energy saving. Even with built-in installation, it is a must to keep 5mm space on each side and at the top to ensure proper service access and ventilation. Take care that the air vent at the front of the appliance must never be covered or blocked in any way.
- Locate the unit away from direct sunlight and sources of heat (stove, heater, radiator, etc.). Direct sunlight may affect the acrylic coating and heat sources may increase electrical consumption. Extreme cold ambient temperatures may also cause the unit not to perform properly.
- Plug the unit into an exclusive, easily accessible plug socket. Any questions concerning power and/or grounding should be directed towards a qualified electrician or an authorized products service center.
- The appliance must be installed to all electrical, plumbing, water and drain connections in accordance with state and local codes.

IMPORTANT: HIGH HUMIDITY CLIMATE. During periods of high humidity, some condensation may appear on outside surface of glass door. This condensation will disappear when humidity levels drop. For prevention, it is advisable to install the appliance with sufficient ventilation in a dry and/or an air-conditioned place.

NOTE: The appliance must be positioned so that the plug is accessible.

BUILT-UNDER INSTRUCTIONS

Make sure your installation does not block the front ventilation grille. The unit is designed to fit into a space with the following dimensions: Width A, Height B, Depth C, and Width D (all measurements in mm as per the diagram provided).
When built under, ensure that there is at least 20mm space between the top of the unit and any overhanging surface to allow for ventilation. Tighten the screws to lock the unit in position.
Ensure there is no damage to the water, gas, or electrical supply when installing the unit. Avoid using an extension cord or adapter plug; if the power cord is damaged, it must be replaced by the manufacturer, its service agent, or a similarly qualified person to avoid a hazard. Obtain an appliance that has to work harder, resulting in an increase in electricity consumption.

NOTE: When pushing the appliance into the niche, make sure that the mains cable does not get trapped.

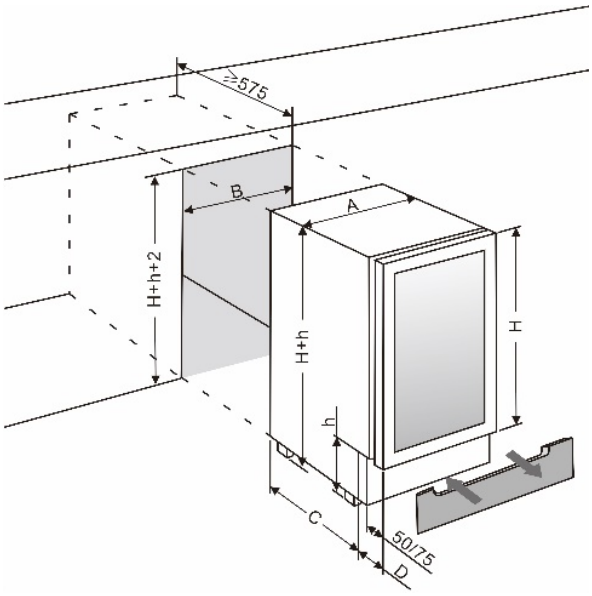

	A (in)	B (in)	C (in)
23.6” Wide	23.4	24.0	20.5

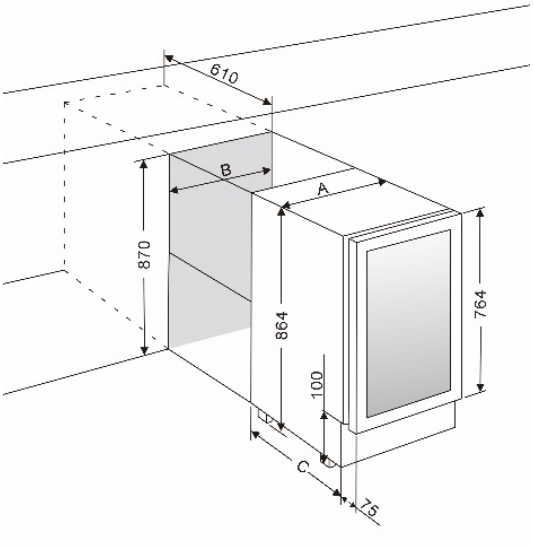

	A (in)	B (in)	C (in)
23.6” Wide	23.4	24.0	20.5

BUILT-IN CABINETRY INSTRUCTIONS

Make sure your installation does not block the front ventilation grill. And be sure the door will open and close properly in the chosen location.

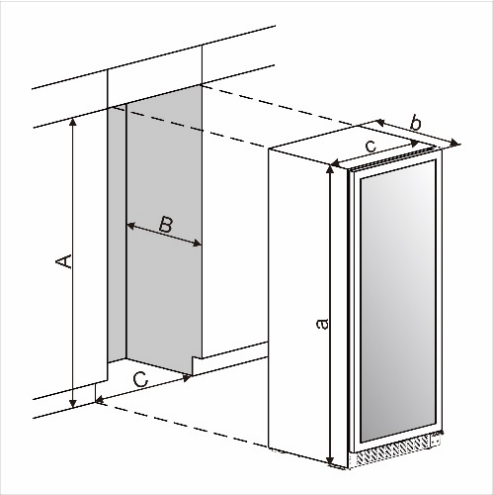

	a (inches)	b (inches)	c (inches)
100	58.19	22.64	23.43
125	69.61	22.64	23.43
125S	71.65	22.64	23.43

ELECTRICAL CONNECTION

WARNING: Improper use of the grounded plug can result in the risk of electrical shock. If the power cord is damaged, have it replaced by a qualified electrician or an authorized service center.

All electrical work should be carried out by a suitably qualified and competent person in accordance with local and national safety regulations.

Check that the voltage marked on the product corresponds with your supply voltage.
Connect this appliance to a separate at least 13A circuit. Connection should be made via a suitable switched socket which is easily accessible. For extra safety it is advisable to install a residual current device (RCD) with a trip current of 30mA.
Have the receptacle and the circuit checked by a qualified electrician to ensure that the socket is grounded correctly.

Note: In locations where there is frequent lightning, it is advisable to use surge protectors.

Do not connect the appliance to the mains electricity supply via an extension lead. Extension leads do not guarantee the required safety of the appliance (e.g., danger of overheating).
The appliance must not be connected to an inverter and must not be used with a plug adapter as these can cause damage to the appliance's electronic unit.
The cord must rest securely behind the appliance and not be allowed to lie or hang unprotected.

WARNING: THIS APPLIANCE MUST BE GROUNDED.

INSTALLING THE HANDLE

IMPORTANT: Do not overtighten the screws & do not use power tools to install the handle.

DESIGN 1 -

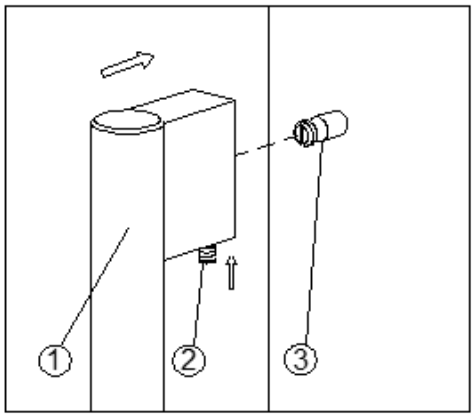

Locate the handle (1) over the mounting stubs (3) of the door and fix the handle by grub screws (2) with an Allen key to secure.

DESIGN 2 -

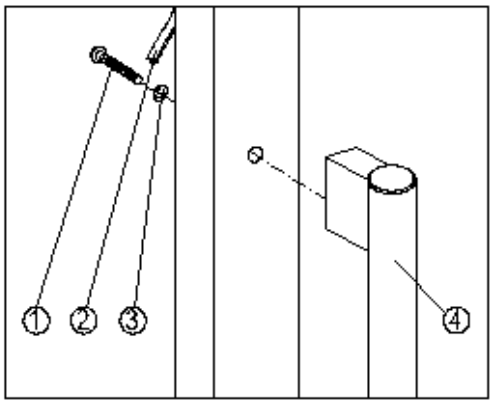

Remove the door gasket (2) on the side you wish to install the handle from, exposing the two designated holes for handle installation as shown above with two screws (1) and fasteners (3) provided.
Replace the door gasket.

REVERSING THE DOOR HINGE

It is possible to reverse the door on this appliance, if required. Follow the steps below:

Note: All parts removed must be saved to do the reinstallation of door.

DESIGN 1 - For built-under models

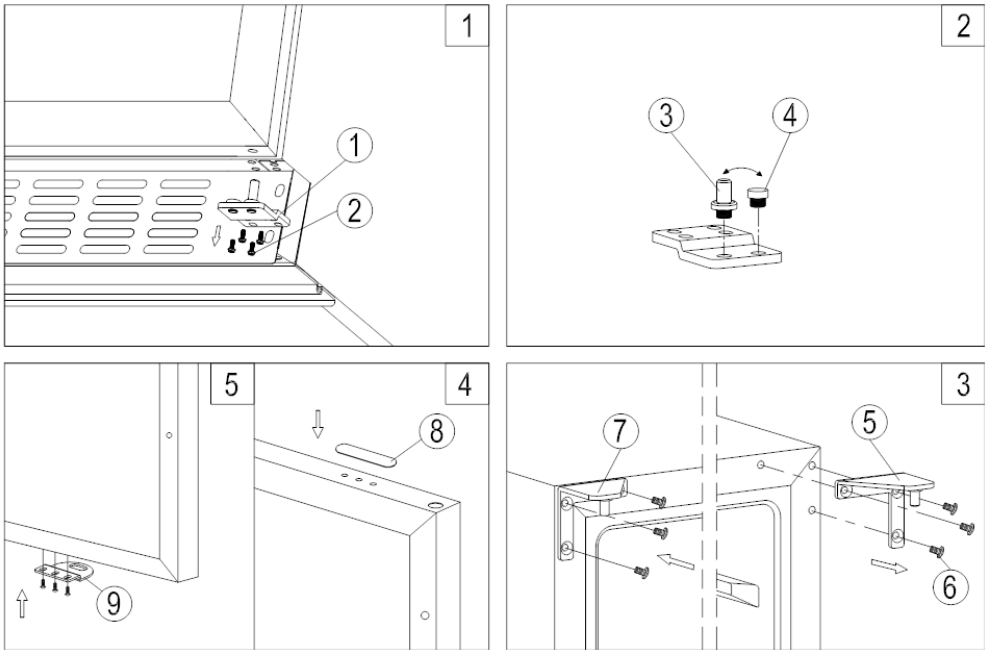

1. Remove the bottom hinge (1) by unscrewing the four lock screws (2). Be careful to hold the glass door firmly after removing the screws. (Fig. 1)
2. Gently pull down to remove the glass door from the right top hinge and place it on a padded surface to avoid the risk of damage. Then remove the right top hinge (5). (Fig. 3)
3. Unscrew and transfer hinge pin (3) and/or door stopper (4) of the bottom hinge to the op-po¬site side. (Fig. 2)
4. Pop out the cover caps on the left side of cabinet and use them to cover the screw holes on the right hand side.
5. Screw the alternative left top hinge (7), included in the fittings, on the left hand side of cabinet. (Fig. 3)
6. Unscrew and transfer the holes cover (8) and lock catch (9) to the oppo¬site side of glass door. (Only for models with lock on the ventilation grille) (Fig. 4)
7. Rotate the door 180° (No need for models with lock on the door) and relocate the door to the designated position. Then screw the bottom hinge assembly on the left designated position and tighten it after the door is leveled.

DESIGN 2 – For high models

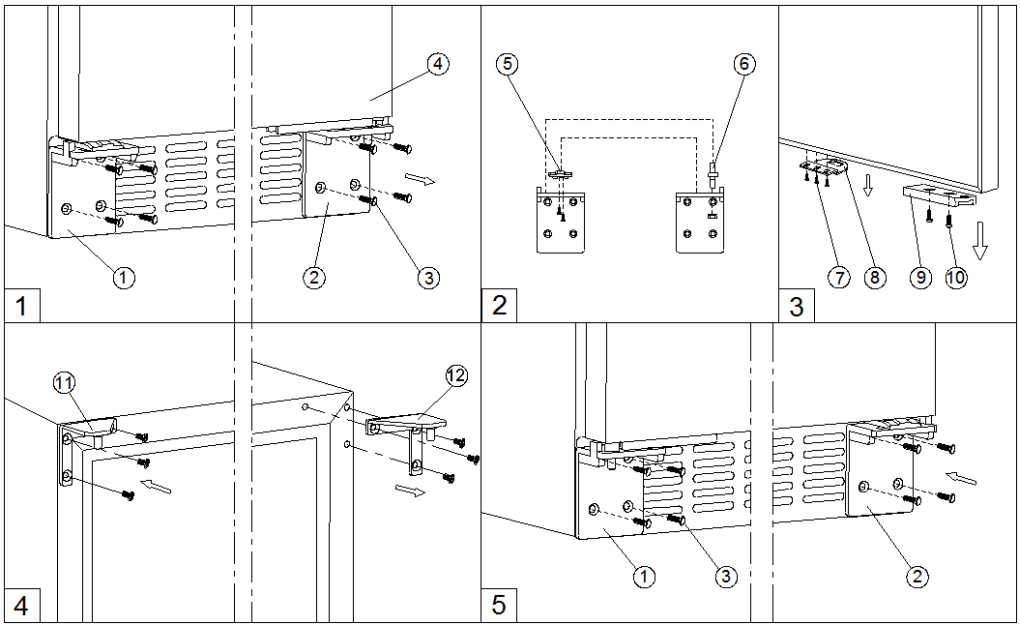

1. Remove the right bottom hinge (2) and/or left bottom hinge (1) by unscrewing the eight lock screws (3). Be careful to hold the door (4) firmly after removing the screws. (Fig. 1)
2. Gently pull down to remove the door from the right top hinge and place it on a padded surface to avoid the risk of damage. Then remove the right top hinge (12). (Fig. 4)
3. Pop out the cover caps on the left side of cabinet and use them to cover the screw holes on the right hand side.
4. Screw the alternative left top hinge (11), included in the fittings, on the left hand side of cabinet. (Fig. 4)
5. Unscrew and transfer hinge pin (6) and/or door supporter (5) to the opposite bottom hinge. (Fig. 2)
6. Unscrew and transfer the door adapter (9) and/or lock catch (8) to the top designated positions of the door. (Fig. 3)
7. Rotate the door 180° and relocate it to the designated position. Then screw the bottom hinges on the designated positions and tighten them. (Fig. 5)
8. Recheck and adjust the door alignment by loosening the screws (10) and moving the door adapter (9). Tighten the screws (10) after the door is levelled. (Fig. 5)

SECURING THE APPLIANCE

Pop out the two cover caps on the opposite side of hinge and secure the appliance in the niche by tightening the screws through the attachment bracket if the unit is provided with an attachment bracket.

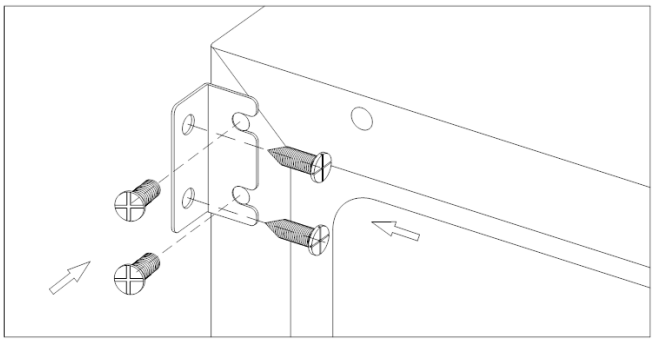

OPERATION

This appliance is designed for operation at certain ambient temperatures. The climatic class is specified on the rating plate.

The appliance may not work properly if it is left for a long period at a temperature outside the specified range. For example, placing your unit in extreme cold or hot conditions may cause interior temperatures to fluctuate. The range between 36°F and 54°F (2°C and 12°C) may not be reached.

Test room climatic class	Dry bulb temperature °C	Relative humidity %	Dew point °C	Water vapor mass in dry air g/kg
0	20	50	9.3	7.3
1	16	80	12.6	9.1
2	22	65	15.2	10.8
3	25	60	16.7	12.0
4	30	55	20.0	14.8
5	40	40	23.9	18.8
6	27	70	21.1	15.8
7	35	70	30.0	27.3
8	24	55	14.4	10.2

NOTE: A unit with no heater will not raise its internal temperature if the ambient temperature where the unit is located is lower than the set temperature.

NOTE: When you use the appliance for the first time or restart the appliance after having been shut off for a long time, there could be a few degrees variance between the temperature you select and the one indicated on the LCD readout. This is normal and it is due to the length of the activation time. Once the unit is running for a few hours everything will be back to normal.
If the unit is unplugged, has lost power, or is turned off, you must wait 3 to 5 minutes before restarting the unit. If you attempt to restart before this time delay, the unit will not start.

USE AND CONTROL

The Controls of Your Unit

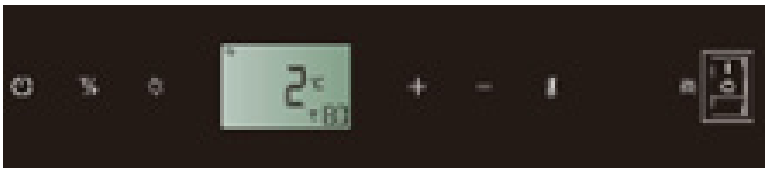

POWER
To turn the appliance off, lightly touch and hold the key for 5 seconds until temperature display goes out. To turn the appliance on, lightly touch and hold the key for 1 second until temperature display lights up.

°F/°C Selector
Set the temperature to be displayed in degree Fahrenheit or degree Celsius.

LIGHT
To turn the interior light on/off, lightly touch and hold the key for 5 seconds.

UP
Used to increase (warm) the set temperature by 1°C/1°F.

DOWN
Used to decrease (cool) the set temperature by 1°C/1°F.

Setting Selector
Select the temperature and humidity you want to set.

UVC Disinfection Switch
Used to turn the UVC disinfection on/off. I is ON and O is OFF. Turn on the UVC disinfection for at least 2 hours to disinfect the interior before placing the content into the unit.

Symbols in the Display

Temperature or Error code display
Compressor is ON.
Heater is ON.
Defrosting mode.
DynaClima mode.
DEMO Eco Demo mode.
The interior light is in Showcase mode.
Warning
Audible tones signal
Relative humidity display

Multi-key Function

To perform the multi-key function, lightly touch and hold the first key, then touch the rest key for at least 5 seconds and then release all the keys.

Setting the Temperature Control

The unit has an adjustable temperature compartment. The temperature can be set between 36°F

and 54°F (2°C and 12°C).
When the unit is plugged in for the first time, the unit will power up automatically to the preset default. The temperature preset at the factory is 36°F (2°C) (ideal beef and pork aging temperature).

Touch the Setting Selector until the temperature you want to set is flashing. Then you can use the UP and DOWN keys to set the internal temperature as required. When you touch either key at the first time, the display will show the last temperature set previously.

The temperature will increase 1°C/1°F if you touch the UP key once, or the temperature will decrease 1°C/1°F if you touch the DOWN key once. The display flashes while you make the setting.

The set temperature will temporarily flash in the display for 5 seconds after the temperature has been set. Then the display shows the current inner temperature again.

To view the set temperature at any time, touch the Setting Selector key, the set temperature will temporarily flash in the display for 5 seconds. Then the display shows the current inner temperature again.

Setting the Humidity Control

- The appliance is equipped with a system for maintaining the correct level of humidity. Before starting to use, fill the water tank at the bottom of interior compartment with drinking water. Check the water level regularly and refill as necessary.
- Touch the Setting Selector until the humidity display is flashing. Now you can use the UP and DOWN key to select the relative humidity setting from 50% to 90% and 00%. The set humidity will temporarily flash in the display for 5 seconds. Then the display shows the current inner humidity again. The humidity preset at the factory is 80% (ideal beef and pork aging humidity).
- When 00% is selected, the humidity control system will be switched off.

SETTINGS MODE

Certain settings on the unit can only be selected in Settings mode.
Touch and hold the UP key for 5 seconds to enter and leave Settings mode. The appliance will leave Settings mode automatically after approximately one minute.

ºF/ºC Selection

1. Lightly touch and hold the UP key for 5 seconds to enter Settings mode.
2. Use the UP and DOWN keys to select the temperature display setting in Fahrenheit or Celsius degree.
3. Touch and hold the UP key for 5 seconds to confirm the selection.

Display Brightness

Lightly touch and hold the UP key for 5 seconds to enter Settings mode and then touch the POWER key once.
Use the UP and DOWN keys to select the brightness of the display when the door is close.
d0: off
d1: dimmest setting (default)
d2: medium setting
d3: brightest setting (same level as when door is opened)
3. Touch and hold the UP key for 5 seconds to confirm the selection.

Interior Lighting Brightness

1. Lightly touch and hold the UP key for 5 seconds to enter Settings mode and then touch the POWER key twice.
2. Use the UP and DOWN keys to select the brightness of the interior lighting when the door is close.

L0: off when the door is close or open
L1: dimmest setting
L2: medium setting
L3: brightest setting (default) (same level as when door is opened)

3. Touch and hold the UP key for 5 seconds to confirm the selection.

Fan Mode (Pls don't change the fan mode for dry ager! The dry ager must work in the DynaClima mode with full time.)

1. Lightly touch and hold the UP key for 5 seconds to enter Settings mode and then touch the POWER key three (3) times.
2. Use the UP and DOWN keys to select the fan mode.

F0: Silent mode - Energy saving mode
F1: DynaClima mode - half time
F2: DynaClima mode - full time (default)

3. Touch and hold the UP key for 5 seconds to confirm the selection.

Audible Tones

1. Lightly touch and hold the UP key for 5 seconds to enter Settings mode and then touch the POWER key four (4) times.
2. Use the UP and DOWN keys to select the audible tones.

S0: keypad tone ON, alarm tone OFF
S1: keypad tone ON, alarm tone ON (default)
S2: keypad tone OFF, alarm tone OFF
S3: keypad tone OFF, alarm tone ON

3. Touch and hold the UP key for 5 seconds to confirm the selection.

IMPORTANT INFORMATION FOR DRY AGING

Select the food.
Have a butcher/expert whom you trust inform you about dry aging. Only use meat which is suitable for refinement.
IMPORTANT: Only use food with a maintained cold chain that was handled under good hygienic conditions.
Use fresh meat on the bone at maximum 5 days after slaughtering or max. 2 weeks vacuum matured meat (remove foil for dry aging).
Dry age individual cuts (about 2 - 4 kg) or half saddles of meat on the bone.

To minimize the weight loss during dry aging, use meat with a thick enough protective layer of fat. Recommendation for dry aging beef: saddle from a heifer with good fat cover and marbling.

If ordered: unpack the salt blocks and remove the foil. Put the salt blocks in the stainless steel collecting tray and place the tray in the middle at the bottom of the compartment. Please check every 2 - 3 days if there is any remaining water on the salt blocks, if so, please remove the water.

The dry aging is an expensive process and requires time and ideal conditions. Only hang / place the meat in the unit when the desired temperature has been reached and the UVC disinfection has been switched on for at least 2 hours.
The recommended temperature and humidity settings are 2°C and 80% RH for dry aging beef and pork; 8°C and 75% RH for post-maturing ham and salami.
Avoid to open the door much in order not to affect the temperature and humidity of the air inside the unit.

Hang the full saddle on the hanger of your unit or put the individual cuts on the shelves.
When using frozen meat, defrost before putting inside the appliance.
Wear clean protection cloth (gloves, etc.) when handling food. Do not touch the meat without wearing protective gloves! A hazard of dry aging is wild fungi that can spoil the meat and cause toxic and allergic reactions. For this reason, make sure that you maintain impeccable standards of hygiene when handling the meat and the equipment and have a butcher/expert whom you trust provide you with comprehensive information about it. If you notice a sours smell, this may be an indication of wild fungi.
For optimal dry aging conditions, air circulation around the food is necessary: prevent mutual contact and contact with the interior liner.

Consider aging time.
The optimal aging time depends on many parameters. Typical aging times, which can be considered as a rough reference, are as follows:
Fresh meat of beef: ~ 21-28 days

Fresh meat of pork: ~ 14-21 days
Vacuum packed meat (remove foil before aging): up to ~ 14-18 days
Ideal dry aging times are 21 - 28 days, but a dry aging period of more than 4 weeks is also possible, which makes the meat taste even more intense and stronger aroma.

Check regularly dry aging food. If you observe mold, an unusual smell (e.g. pungent, putrid) or other potential contamination of the food, dispose it in accordance with your local rules and regulations. Then clean the appliance thoroughly.

Once the aging process has been completed, dark and dry patches of meat must be generously removed.

The active charcoal air filter and the UVC bulb must be replaced semi-annually.

Disclaimer: The manufacturer will not assume any liability for damage to aging food, not even in the event of a fault in the equipment during the warranty period. The manufacturer will also not accept liability for injury to individuals caused by improperly stored goods which are subsequently consumed.

TEMPERATURE DISPLAY

During normal operation, the temperature display on the control panel shows the temperature inside the appliance. The temperature display will flash if

- A different temperature is being set,
- The temperature in the zone deviates by more than 5°C (9°F) from the set temperature.

The temperature display flashing ensures that the temperature cannot rise or fall unnoticed and impair the food.

TEMPERATURE MEMORY FUNCTION

In the event of a power interruption (power surge, breaker switch, etc.), the unit remembers the previous temperature settings. When the power is recovered, the cabinet temperature will go back the same setting temperature as before the power interruption.

TEMPERATURE ALARM

An audible alarm will sound if the temperature rises or falls outside the temperature range. The relevant temperature display will flash at the same time. Also the symbols & will light up in the display.

The temperature the appliance is set at determines the temperature the appliance recognizes as being too warm or too cool.

The audible alarm will sound and the temperature display will flash:

- When you switch the appliance on, if the temperature inside the appliance is very different from the temperature set.
- When there has been a lengthy interruption to the power supply.
- When too many items have been put into the unit at one time. Or too much ambient air flowed in when rearranging and removing storage items.
- When the door is not been closed tightly.
- The appliance is faulty.

The audible alarm will be automatically silenced, the temperature display stops flashing and the symbols & will go out when the set temperature is reached again. However, if the noise disturbs you, you can switch the audible alarm off before this if you wish by touching any key once. The alarm will stop. The relevant temperature display continues to flash and the symbols & will continue to be lit up until the set temperature has been reached. The display then lights up constantly, the symbols & will go out and the alarm system is fully active again.

HUMIDITY ALARM

A humidity audible alarm will sound if the humidity inside the unit rises or falls outside the humidity range. The relevant humidity display will flash at the same time and the symbol will light up. The flash of LL and indicates too low humidity level and the flash of HH and indicates too high humidity level.

The audible alarm will be automatically silenced, the humidity display stops flashing and the symbols & will go out when the set humidity range is reached again. However, if the noise disturbs you, you can switch the audible alarm off before this if you wish by touching any key once. The alarm will stop. The relevant humidity display continues to flash and the symbols & will continue

to be lit up until the set humidity has been reached. The display then lights up constantly, the symbols & will go out, and the alarm system is fully active again.

UVC DISINFECTION ALARM

The audible alarm “B, B, B” will sound continuously if the UVC disinfection is faulty. The audible alarm can’t be switched off until the UVC disinfection fault has been corrected.

WATER LEVEL ALARM

The alarm will be activated when the water level is too low. The water level indicator will flash in red and the audible alarm “B, B” will sound 10 seconds every 3 minutes if,

- The water tank is short of water
- The water level switch is failure

The alarm can’t be switched off until the water has been refilled or the water level switch fault has been corrected.

DOOR ALARM

If the door has been left open for more than 60 seconds, the audible alarm will sound and the symbol will light up. Closing the door or touching any key once can switch off the audible alarm.

INTERIOR LIGHT / TriColor LIGHTING

The interior lighting makes it easy to view your content. Touching and holding the LIGHT key for 5 seconds toggles between 2 modes of operation for the interior lights: functional (default) mode and showcase mode. If you are in functional (default) mode, the lights will turn on only when the door is open. The interior light will go out approx. 5 seconds after the door is closed. If you are in showcase mode, the lights will be on whether or not the door is open and the symbol will light up.

The unit is equipped with the LED type lights and they are designed for extremely long life. Thanks to the LED lighting, the meat will not be adversely affected by heat or UV light. But they are not user serviceable. To change them pls contact the service department.

NOTE: Please use only the original LED light fittings provided by the manufacturer.

If your model is provided a TriColor lighting, you can select the color of interior light - amber, white and blue by touching the LIGHT key. Touching the LIGHT key toggles between single color mode and dynamic color mode. In the dynamic color mode the interior light will start to cycle through the 3 available colors. Touching the LIGHT key once when the desired color is on, your interior light will be changed to that color. To change back to the dynamic color mode, touch the LIGHT key again.

ECO DEMO MODE

Eco Demo mode can be activated by presenting the appliance at exhibitions or in salesrooms. In Eco Demo mode, the compressor and all fan motors are switched OFF. Also it is perfect as a cleaning mode. The refrigeration switches off while the lights stay on.

By touching and holding the “UP”&“DOWN” and “LIGHT” keys simultaneously for at least 5 seconds, the symbol will light up to confirm the selection and the unit will operate in Eco Demo mode. Eco Demo mode can be canceled by repeating the above process and the symbol will go out.

OPERATING NOISES

The unit is cooled by a compressor (refrigeration aggregate). The compressor pumps coolant through the cooling system, producing operating noise. Even when the compressor cuts out, noises caused by changes in temperature and pressure are unavoidable. Operating noise will be most audible immediately after the compressor cuts in. It becomes quieter as the operating period continues.

The following noises are normal and occur from time to time:
- Gurgling sound, caused by the refrigerant flowing through the appliance's coils,
- Humming noise made by the motor compressor. This noise can get louder for brief periods when the motor is switching on.
- Crackling/popping sounds, resulting from the materials contraction and expansion due to temperature variations,
- Fan operating sound, to circulate the air within the wine cabinet.

Unusual noise is normally the result of improper installation. Under no circumstances must tubing come into contact with a wall, other furniture or with other tubing.

Where the unit is installed in an open-plan kitchen or in partition walls, the level of operating noise will be heard more acutely. However, this is due to the surrounding architecture and not to the unit.

An individual's perception of noise is directly linked to the environment in which the unit is located, as well as the specific type of model. Our appliances are in line with international standards for such appliances and in line with the latest technical developments. But please remember that the noise of the compressor and the coolant circulating in the system is unavoidable.

DEFROSTING

Your unit is designed with an automatic defrost system. During the "Off-cycle" the evaporator behind the rear wall of the unit defrosts automatically. The condensate collects in the drain trough behind the rear wall of the unit, and part of it flows through the drainage hole into the drip tray by/above the compressor. The heat is transferred from the discharge pipe or compressor and evaporates any condensation that has collected in the tray.

NOTE: Frost may be accumulated on the evaporator if the unit is repeatedly opened in a high heat or high humidity location. If this frost pattern does not clear within 24 hours, your unit will require manual defrosting.

MAINTENANCE

WARNING *Failure to unplug the appliance during service and cleaning could result in electrical shock or other personal injury.*

HUMIDITY CONTROL

The appliance is equipped with a system for maintaining the correct level of humidity by adding the water to the built-in drawer.

NOTE: Make sure to pull out and push inward the water drawer gently otherwise the water inside the tank is easily to come out.

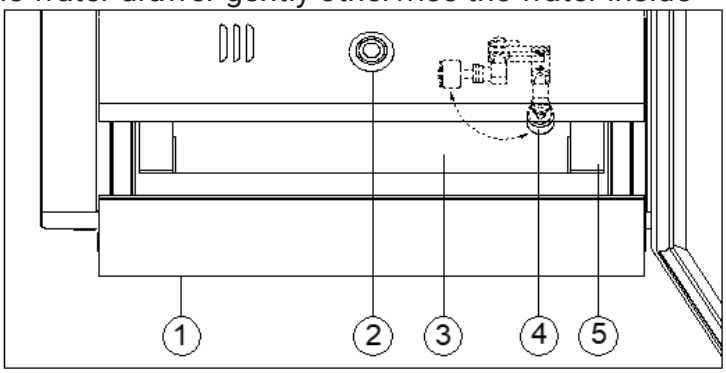

Gently pull out the water drawer (1). Fill with water up to the max. level and then gently push the water drawer back to the designated position. Check the water level regularly and refill as necessary when the water shortage alarm is ON (The water level indicator (2) will flash in red).

After finishing each dry aging of goods inside the appliance, clean the plastic water tank (3) carefully. In order to remove the plastic water tank, gently open the drawer (1) and turn the water level switch (4) to the horizontal position, then pull out the drawer fully and the water tank can be removed. After cleaning reassemble the water tank and turn the water level switch back to the upright position.

Replace the water reservoir (5) every 3 months after use.

UVC DISINFECTION

The UVC disinfection is located in the back of compartment. The UVC disinfection sterilizes the air once every half hour when the UVC disinfection lamp is ON. It can be purchased from the manufacturer.

- Remove the guard (2) by unscrewing the four screws (1).
- Pull the bulb (3) outwards. Unscrew and replace the bulb (3).
- Replace the guard by screwing the four screws (1).
- Switch on the UVC lamp to disinfect and close the door. Pull the bulb guard (4) Unscrew and replace the bulb (3)

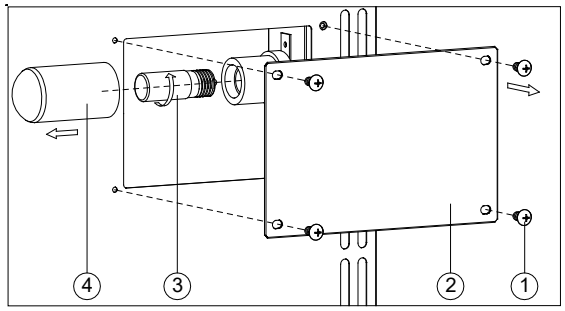

ACTIVE CHARCOAL AIR FILTER

The active charcoal air filter is located in the back of compartment to absorb the odor and keep

the air fresh. The optimum air quality by filtering the air and absorbing the unwanted odors. Replace it with a new one at least once a year. It can be purchased from the manufacturer.

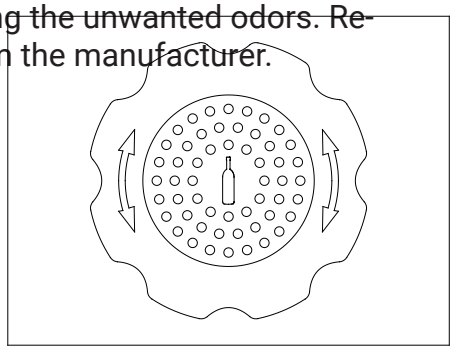

- Remove the shelf in front of the filter.
- Unscrew the air filter cover and remove the old filter.
- Insert the new filter in the vertical position and turn it 90° clockwise or anti-clockwise until it clicks into position.

DOOR LOCK

If the unit is provided with a lock system, the keys are in a plastic bag inside the box. Open the lock by inserting the key into the lock and turn it counterclockwise to unlock the door. To lock the door do the reverse operation making sure metal pin is engaged completely. Remove the key and place it in a secure place for safekeeping.

CLEANING YOUR APPLIANCE

Clean the unit thoroughly after each aging process. Turn off the power, unplug the appliance, and remove all items including shelves, meat hooks and drip collecting tray.
Wash the inside surfaces with a warm water and baking soda solution. The solution should be about 2 tablespoons of baking soda to a quart of water.

Wash the shelves and plastic water tank with a mild detergent solution.

Wring excess water out of the sponge or cloth when cleaning any area of the controls.

The sealing gasket around the door must be cleaned regularly to prevent discoloration and prolong service life. Use clean water. After cleaning the sealing gasket, check that it continues to provide a tight seal.

Wash the outside cabinet with warm water and mild liquid detergent. Rinse well and wipe dry with a clean, soft cloth.

Do not clean the stainless steel with steel wool pads. We suggest using an all-in-one stainless steel cleaner to clean the stainless steel. Always clean in the direction of the grain.

Switch on the UVC disinfection for 24 hours after each cleaning process.

POWER FAILURE

In the event of a power interruption, all previous temperature settings are automatically memorized. If power is interrupted (power surge, breaker switch, etc.) and then powered up again, the unit will operate with the last temperature set-point.

Most power failures are corrected within a few hours and should not affect the temperature of your appliance if you minimize the number of times the door is opened. If the power is going to be off for a longer period of time, you need to take the proper steps to protect your contents.

NOTE: Irrespective of the cause, if you notice either abnormal temperature or humidity levels inside your unit, be reassured that only long and frequent exposure to these abnormal conditions can cause a detrimental effect on your meat.

VACATION TIME

Short holidays: Leave the unit in operation for holidays of less than three weeks.

Long absences: If the appliance will not be used for several months, remove all items, turn off the appliance and unplug. Clean and dry the interior thoroughly. To prevent odor and mold growth, leave the door open slightly, blocking it open if necessary.

MOVING YOUR APPLIANCE

Unplug the power plug from the electrical outlet.

Remove the contents from the racks and all moving parts from inside.

Raise the adjustable legs up to the base to avoid damage.

Tape the door shut and lock it with a lock system.

Transport the unit only in the upright position. Also protect the outside of the appliance with a blanket or similar item.

ENERGY SAVING TIPS

Should the unit be left empty for long periods of time, it is suggested that the appliance is unplugged, and after careful cleaning, leave the door ajar to allow air to circulate inside the cabinet in order to avoid possible condensation, mold or odors forming.

The appliance should be installed in the coolest area of the room, away from heat producing appliances, and out of the direct sunlight.

Ensure that the unit is adequately ventilated. Never cover air vents. Clean dust and dirt from the condenser at regular intervals.

Only open the door for as long as necessary and for as short a time as possible.

Position the content in an organized way. Prevent mutual contact and contact with the inner container.

To allow air to circulate, do not overfill the appliance. Do not cover any part of the shelves with aluminum foil or any other material that will prevent adequate air circulation within the cabinet.

TROUBLESHOOTING

PROBLEMS WITH YOUR APPLIANCE

You can solve many common problems easily, saving you the cost of a possible service call. Try the suggestions below to see if you can solve the problem before calling customer service.

Problem	Possible Cause	Remedy
Nothing works. Appliance does not operate.	Appliance is not connected to a power supply.	Connect the appliance.
	The appliance is turned off.	Switch on the appliance.
	Circuit breaker has tripped or a fuse has blown.	Switch on circuit breaker or replace fuse.
Appliance is not cold enough.	The door was not closed completely.	Close door properly.
	Door is not hermetically sealed.	Check the door seal and clean or replace.
	The condenser is too dirty.	Clean the condenser when necessary.
	The temperature is not set correctly.	Check the set temperature.
	The ambient temperature could require a different temperature setting.	Set a different temperature.
	The door was opened too often.	Do not open the door more often than necessary.
	The ventilation opening is blocked or too dusty.	Clean the obstructions and clean off dust.
Appliance turns itself on and off frequently.	The door is not closed completely.	Close door properly.
	The door gasket does not seal properly.	Check the door seal and clean or replace.
	The room temperature is higher than average.	Fit the appliance in a cooler place.
	A large amount of content has been added to the unit.	Wait until the set temperature has been reached.
	The door is opened too often.	Do not open the door more often than necessary.
The light does not come on.	Appliance is not connected to a power supply.	Connect the appliance.
	Circuit breaker has tripped or a fuse has blown.	Switch on circuit breaker or replace fuse.
	The light was switched off on the control panel.	Switch on the light.
	Light malfunctioning.	Call for service to have it replaced.
Door will not open.	Door lock.	Unlock the door.

Vibrations.	The appliance is not properly level.	Level the appliance with the adjustable feet.
The appliance seems to make too much noise.	Normal refrigerant flow sounds.	Normal operation, no remedy needed.
	Temperature fluctuations causing popping and crackling sounds.	
The door will not close properly.	The door was reversed and not properly reinstalled.	Check the door hinge and re-install it correctly.
	The gasket is dirty.	Clean the door gasket.
	The shelves are out of position.	Check the shelves and refit correctly.
E0, E1, E2, E3, E4, E5, E6, E7, E8 or E9 appears on the display.	Error codes.	Try resetting the controls by disconnecting power for 5 minutes. If the error code returns, call for service.
Alarm sounds and temperature display NOT flashing (door alarm).	Door has been left open longer than 60 seconds.	Close door or touch any key to disable alarm. Alarm will reset when door is closed.
The alarm sounds AND the temperature display flashes (temperature alarm).	Appliance door open too long.	Close door.
	Door opened too often.	Do not open the door more often than necessary.
	Ventilation opening blocked or dusty.	Clean the obstructions and clear the dust.
	Lengthy power interruption.	Leave the appliance to work until the set temperature is reached.
	Large amount of content added.	
The icon dashes “--” is lit and flashing in the temperature display.	Temperature display out of range.	Keep door closed and allow unit to cool to set temperature.
Condensation on outside surfaces of glass door.	High humidity climate.	Install the appliance in a dry and
Condensation on outside surfaces of glass door.		or air-conditioned place.
The UVC disinfection does not work.	UVC disinfection malfunctioning.	Call for service to have it replaced.

KOOLMORE
RESERVE

WARRANTY

LIMITED WARRANTY

Koolmore Supply, Inc. extends a limited warranty to the original purchaser, guaranteeing that this Koolmore product is free from manufacturing defects in material or workmanship for three years from the date of purchase.

Should you discover any such defect within the warranty period, Koolmore Supply, Inc., reserves the right to repair or replace the product without charge, or to cover the cost of replacement parts and repair labor needed to correct defects present at the time of purchase or resulting from regular usage, when the appliance has been installed, operated, and maintained as per the instructions provided.

At its sole discretion, Koolmore Supply Inc. may decide to replace the product. In such an event, your replacement appliance will carry the warranty for the remaining term of the original unit's warranty period.

This warranty is valid exclusively to the original purchaser of the product and only applicable within the United States. The warranty commences from the date of original consumer purchase. Proof of the original purchase date will be required to obtain service under this warranty.

Under this limited warranty, your sole and exclusive remedy will be product repair, as outlined above. All services must be provided by a Koolmore-designated service company.

To claim warranty or request repair service:
Email support@koolmore.com. Please include your name, address, phone number, warranty repair request, and a copy of your proof of purchase receipt. Alternatively, visit koolmore.com and use the contact us page. A Koolmore customer service representative will promptly arrange service for your appliance.

We thank you for choosing Koolmore.

WARRANTY EXCLUSIONS

This limited warranty will not cover:

1. Failure of the product to perform during power failures or interruptions, or due to inadequate electrical service.
2. Damage incurred during transportation or handling.
3. Damage caused by accidents, vermin, lightning, winds, fire, floods, or acts of God.
4. Damage resulting from accidents, alterations, misuse, abuse, improper installation, repair, or maintenance. This includes using any external device that alters or converts the voltage or frequency of electricity.
5. Unauthorized product modifications, repairs by unauthorized centers, or use of non-approved replacement parts.
6. Abnormal cleaning and maintenance not aligned with the user's manual.
7. Use of incompatible accessories or components.
8. Any costs associated with repairs or replacements under these excluded circumstances shall be the responsibility of the consumer.

KOOLMORE

RESERVE